2024

Tanks you can rely on

Containers for storage, logistics and transportation

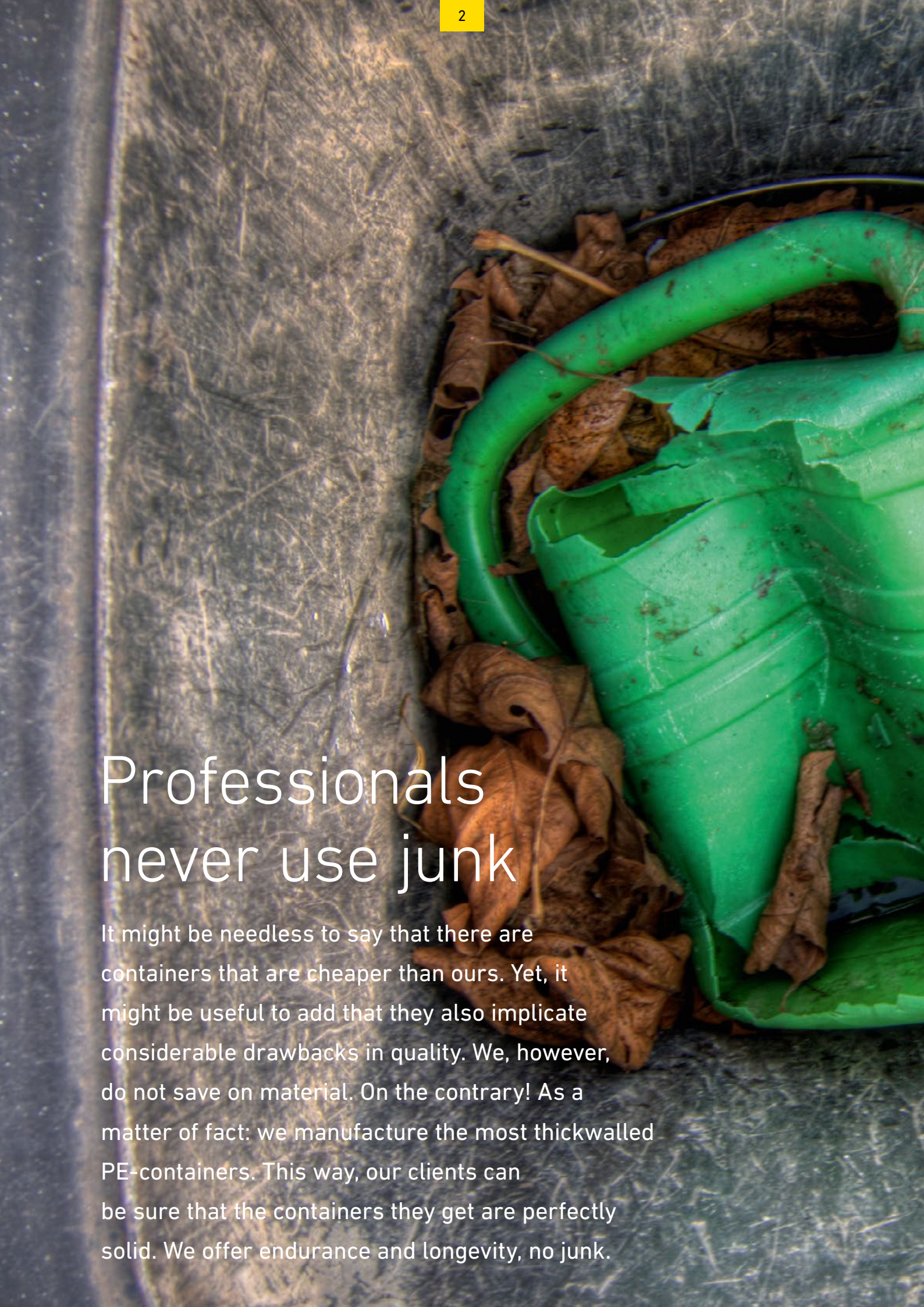

Professionals never use junk

It might be needless to say that there are containers that are cheaper than ours. Yet, it might be useful to add that they also implicate considerable drawbacks in quality. We, however, do not save on material. On the contrary! As a matter of fact: we manufacture the most thickwalled PE-containers. This way, our clients can be sure that the containers they get are perfectly solid. We offer endurance and longevity, no junk.

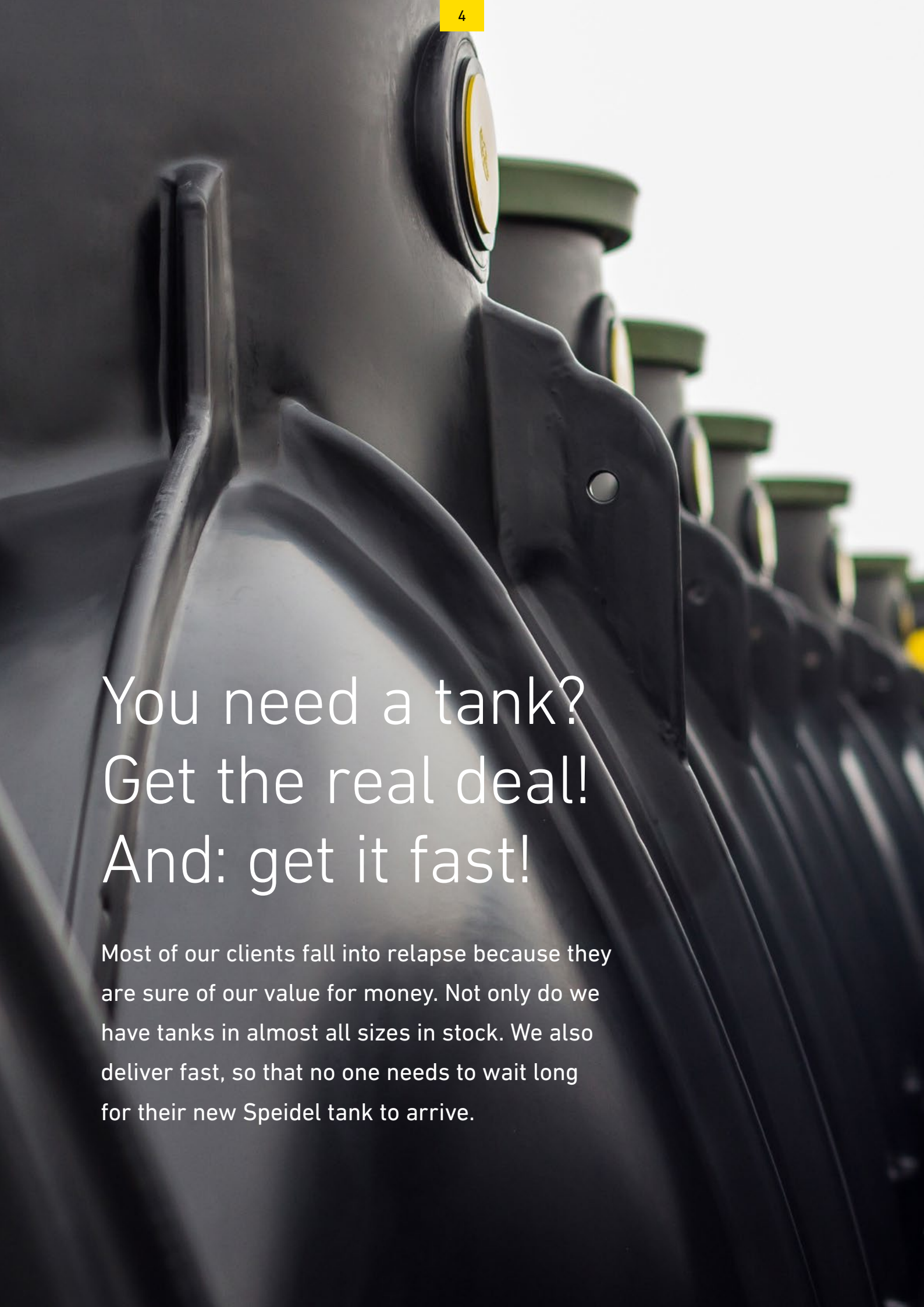

You need a tank? Get the real deal! And: get it fast!

Most of our clients fall into relapse because they are sure of our value for money. Not only do we have tanks in almost all sizes in stock. We also deliver fast, so that no one needs to wait long for their new Speidel tank to arrive.

The principle of our tanks

Multi-purpose tanks

For decades, Speidel has been known for the production of multi-purpose tanks (once made of GRP, now made of PE). Nowadays, tanks of all kindshave proven indispensable almost everywhere, primarily with regard tothe transportation of UAN and water. They render their services as integral tools in every local community and agrarian enterprise. Many companies all over Europe actually swear by them and praise their longevity.

Our containers are made of high-quality, UV-resistant and recyclable PE-material. They are particularly thick-walled to ensure perfect stability. The discharge port 2" ET is located on the lower part of the tank's front side; on its upper part you find the waste drainage nozzel ¾ IT, locked with a blind cap.

MULTI-PURPOSE TANK MODELS

Product	Capacity L	Colour	Item No.	Weight kg
Multi use tank	500	grün	12050-01	30
	1.000	grün	12100-01	60
		gelb	12100	
	2.000	grün	12200-01	105
		gelb	12200	
	3.000	grün	12300-01	165
	4.000	grün	12400-01	230
	5.000	grün	12500-01	300
	8.000	grün	12800-01	370
Multi use tank with anti slosh baffle	1.000	grün	12100-01-8324	70
		gelb	12100-8324	
	2.000	grün	12200-01-8325	120
		gelb	12200-8325	
	5.000	grün	12500-01-8352	330

Dimensions and weight: + / -2 %.

It is their versatility that makes our tanks so popular among public utilities.

DIMENSIONS MULTI-PURPOSE TANK

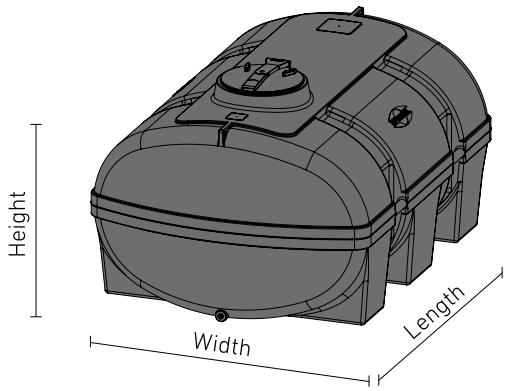

Capacity L	Length cm	Width cm	Height cm
500	143	87	67
1.000	149	123	91
2.000	196	147	109
3.000	233	164	120
4.000	289	171	121
5.000	273	197	136
8.000	300	220	201

APPLICATION RANGE

- Water
- UAN
- Natural brine
- Wastewater, containing feces

SPEIDEL MULTI-PURPOSE TANK ADVANTAGES

- **Food safe**
  With KTW approval (Guidelines for the Hygienic Assessment of Organic Materials in contact with drinking water)
- **Permanently leak-proof**
  Made of one piece without welds
- **Solid and exchangeable**
  Welded-on PE-flange 2" with double nippe / 3" with double nipple on multi-use barrel 8.000 litres
- **Elevated filling dome**
  ø 38 cm, integrally moulded, with anti-slosh baffle
- **PE-lid with hinge**
  Including air valve
- **Firm grip on everything**
  Four integrally moulded handles for lifting or fastening
- **Hot stuff**
  Long-term use temperature max. 60 °C

Even in case of heavy movements the anti slosh baffles bridle the content of the tank – for lengthwise installation of the tank on a vehicle

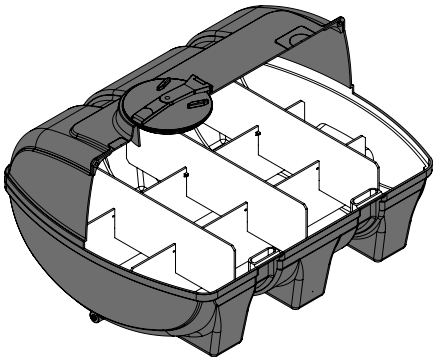

Dimensions and weight: + / -2 %.

Storage tank

Speidel's storage tank is solid and weather-proof. Thanks to its very thick walls, the tank is extremely robust and offers multiple uses.
It can be positioned both indoors and outdoors. For the most part, storage tanks are used for water, wastewater and natural brine, but also for UAN and even olive oil.

The container is made of high-quality, UV-resistant and food safe PE material. The discharge port with a 2" external thread is located directly above the tank bottom. Storage tanks can be positioned on any flat spot and are easy to expand modularly.

**You need a special tank with customised nozzles?
Just ask us!**

STORAGE TANK MODELS

Product	Capacity L	Item No.	Weight kg
Storage tank made of PE	6.000	25060	200
	10.000	25100	350

Dimensions and weight: + / -2 %.

No worries. Our storage tanks sustain more than you think. Yet: do not forget to verify the subfont's carrying capacity.

APPLICATION RANGE

- Water
- Wastewater, containing feces
- Natural brine
- Liquid fertilizer (UAN)
- Cooking oil, e. g. olive oil

STORAGE TANK DIMENSIONS

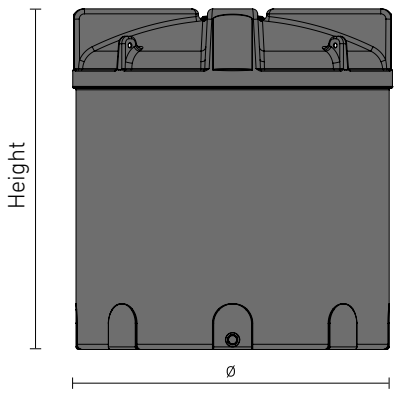

Capacity L	ø cm	Height cm
6.000	217	197
10.000	245	261

SPEIDEL STORAGE TANK ADVANTAGES

- **Food safe**
  With german KTW-license for drinking water
- **Permanently leak-proof**
  PE-tank made of one piece without welds
- **Solid and exchangeable**
  Welded-on PE-flange 2" with double nipple
- **Filling dome**
  ø 38 cm
- **PE-lid with hinge**
  Including air valve
- **Hook it up!**
  Four integrally moulded lifting brackets
- **Hot stuff**
  Long-term use temperture
  for PE-made storage tank max. 60°C
  Long-term use temperature
  for PP-made storage tank max. 90°C

Dimensions and weight: + / -2 %.

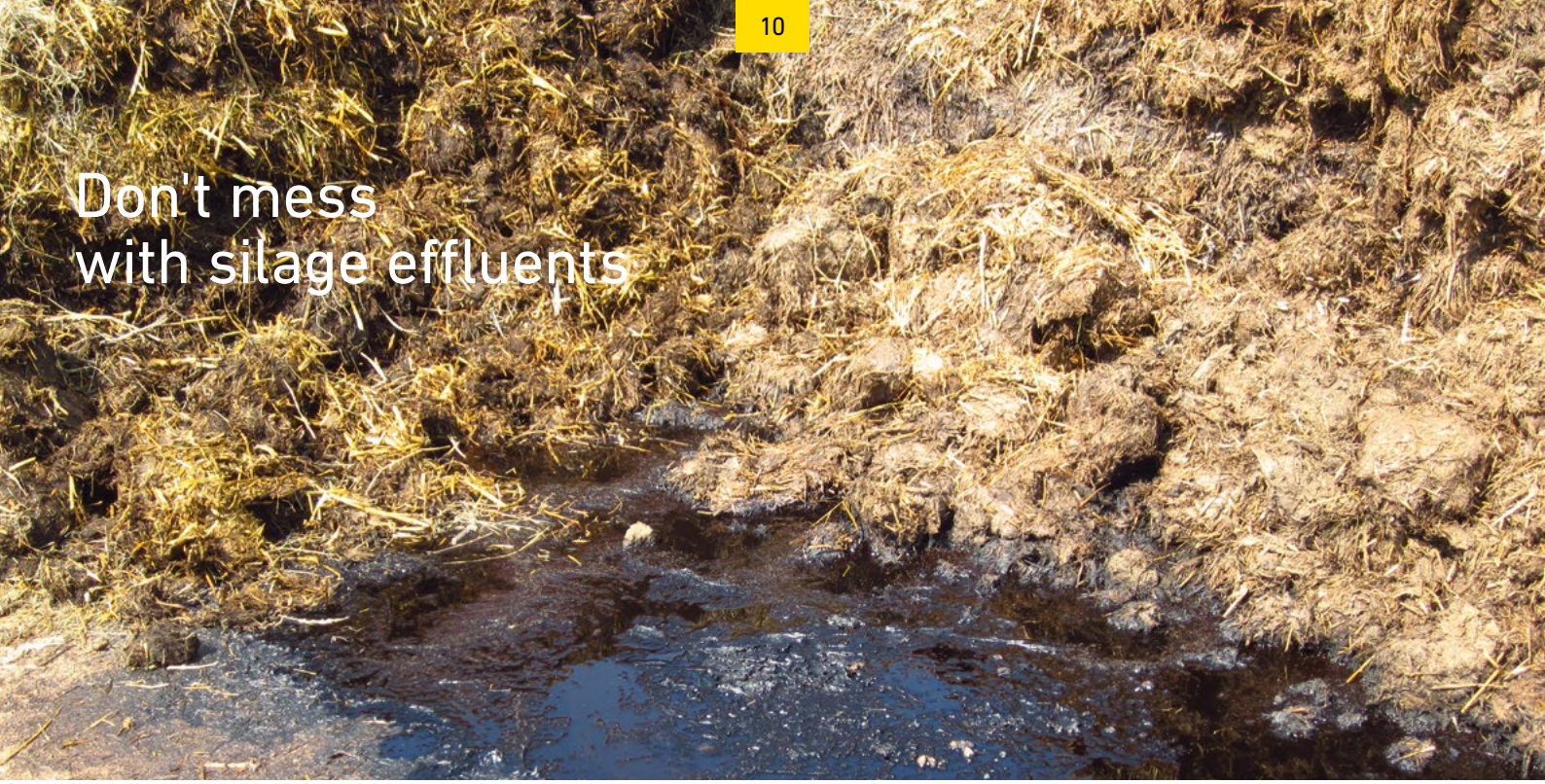

Recuperation tanks for silage effluents

For the production of our recuperation tanks we only use high-quality polyethylene. It is resistant to almost all chemicals – also to the ingredients of silage effluents and their reaction and decomposition products. This is the reason why our containers are ideally suited as recuperation tanks. And in case you should not need your 'collecting pit' any longer, the tank – once professionally cleaned – can be used as rainwater storage tank without hesitation.

Like all Speidel products, also our recuperation tank is high-quality and can not be compared to dumping price products from the do-it-yourself-store. We for sure do not save on materials. Thanks to its ribbed construction and massive legs you can be sure that your tank is and remains solid and firm.

Our tanks are drivable up to a total weight of 3.5 tons and an axle load of 2.2 tons with the appropriate drivable manhole and manhole cover.

RECUPERATION TANK TRMO MODELS

Product	Capacity L	Item No.	Weight kg
Recuperation tank RTMO	2.000	08200	112
	3.000	08201	158
	4.000	08202	208
	5.000	08203	258
	7.500	08204	390
	10.000	08330	500

Dimensions and weight: + / -2 %.

May it be a little bit more?

SPEIDEL RECUPERATION TANK RTMO ADVANTAGES

- **Do It Yourself**
  Ideally suited for do-it-yourself mounting
- **Top stability**
  Thick-walled like no other PE-tank
- **Dauerhaft dicht**
  Made of one piece without welds
- **Handy**
  Two lifting brackets and four carrying handles

RECUPERATION TANK RTMO DIMENSIONS

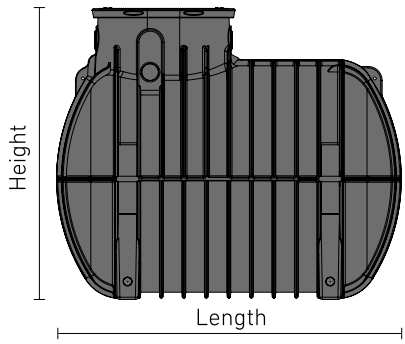

Capacity L	Length cm	Width cm	Height cm
2.000	214	126	159
3.000	245	145	178
4.000	245	169	200
5.000	245	191	222
7.500	280	220	250
10.000	300	245	254

Dimensions and weight: + / -2 %.

The dung beetle couldn't care less about silage effluents, but that doesn't count for you.

For more fruit than you can carry

All-purpose tub

No matter whether you want to collect freshly harvested apples or old, dirty socks: Speidel's all-purpose tub lives up to its name. This very solid and firm one-piece container is made of food safe PE-material. It can be used in manifold ways: as transport container for solid food products, as fruit tray or pomace tub. Yet, it is also ideal as storage tub or spill sump for waste material and hazardous substances.

When filled, you can stack up two tanks at a time. When empty, the all-purpose tub can be stacked endlessly. As for the smooth transportation of grapes from the vine to the wine-press, please ask for our special grape tipping box, not depicited in this brochure.

ALL-PURPOSE TUB

Product	Capacity L	Item No.	Weight kg
All-purpose tub	200	10101	30
Tub with wheels	200	10103	32

Dimensions and weight: + / -2 %.

When empty, the solid all-purpose tub can be stacked multiple times.

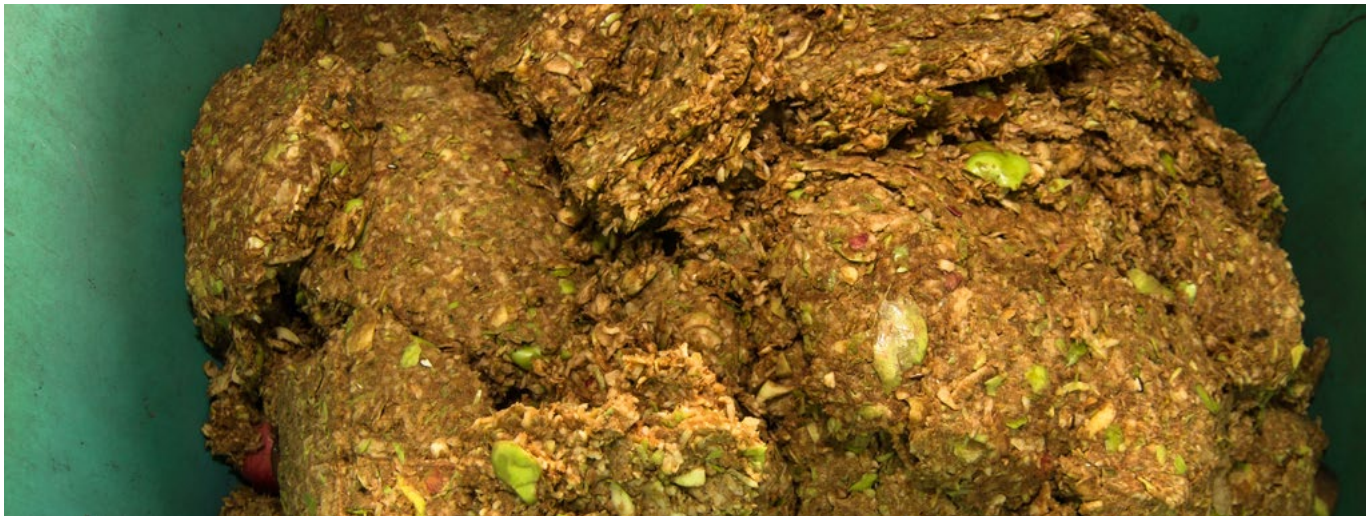

ALL-PURPOSE TUB DIMENSIONS

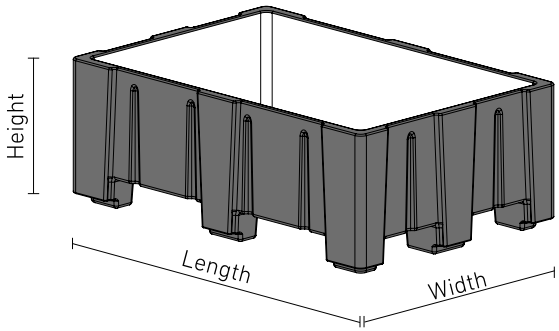

Capacity	Length	Width	Height
L	cm	cm	cm
200	127	86	46

SPEIDEL ALL-PURPOSE TUB ADVANTAGES

- **Solid and firm**
  Made of one piece as double-walled PE-tub
- **Food safe**
  White PE, subject to EU-regulation 1935/2004
- **Clean**
  Easy to clean, white PE
- **Stackable**
  When empty: endlessly;
  when full: two containers on top of each other
- **Accessible**
  On all four sides accessible
  from underneath by forklift or pallet truck

APPLICATION RANGE

- Solid food
- Fruit
- Pomace
- Hazardous material

Dimensions and weight: + / -2 %.

Accessories

ACCESSORIES FOR STORAGE TANK, MULTI-USE TANK AND RECUPERATION TANK RTMO

Product	Item No.
Ball valve	
› Zinc-plated brass, 1 x IT / 1 x ET	
1 ¾"	02100
2 1"	02101
3 1 ¼"	02025
4 1 ½"	02026
5 2"	02027
Ball valve	
› Zinc-plated brass, IT on both sides	
1 1"	02029
2 1 ¼"	02030
3 1 ½"	02031
4 2"	02032
PVC ball valve	
› IT on both sides 2"	02039
PVC double nipple	
1 ¾"	02058
2 1"	02059
3 1 ¼"	02060
4 1 ½"	02061
5 2"	02062
6 3"	02063
PVC recutions	
1 ET2"–ET 1½"	66908
2 ET 2"–ET1¼"	66907
3 AT 2"–IT 1"	66906
4 ET 1¼"–ET1"	65793
5 IT 1¼"–ET 1"	64544
6 IT 1¼"–IT ¾"	64542
Stainless steel	
1 Screw connection ¾"	02117
2 Screw connection 1"	02119
3 Screw connection 1 ¼"	02121
4 Screw connection 1 ½"	02123
5 Screw connection 2"	02125
Aluminium fire hose coupling	
› C IT2"	02073

Dimensions and weight: + / -2 %.

ACCESSORIES FOR STORAGE TANK, MULTI-USE TANK AND RECUPERATION TANK RTMO

Product		Item No.
Synthetic tank strainer › For filling dome ø 38 cm › Fits into the throat of the storage tank's lid		63899
PVC closing cap › IT 2"		69006
Through housing joint › For pipe NS 100		65448
PVC spiral coiled tube **1** NS 60 per linear metre		08031
KAMLOK coupling (male) › IT 2"		02071
KAMLOK coupling (female) › IT 2"		02072
PVC hose nozzle **1** ET 1¼" NS 40 **2** ET 2" NS 60		02077 02078
Vent cap NS 100 › With bug screen		08166
Manhole pit for recuperation tank RTMO, round, driveable by vehicle › Up to 600 kg wheel load › Steplessly adjustable in height › Elevation of upper edge of access opening 60 to 80 cm › For frost-proof earth covering of 100 to 120 cm (90 to 110 cm for RTMO 10.000 litres) › Opening diameter 60 cm › Lid and transition oval / round › Childproof locking device		08235
Manhole pit for rainwater tank RTMO, oval, walkable › Adjustable in height with circumferential step tread › Elevation of upper edge of access opening 45 to 65 cm › For frost-proof earth covering of 90 to 110 cm (70 to 90 cm for RTMO 10.000 litres) › Made of black PE-synthetics		08220

Dimensions and weight: + / -2 %.

Speidel revamps the winter

The next winter is coming without any doubt. But does it really bother you, once you are prepared? We mean: prepared with grit bins that have an appeal? Yet, as for looks, it is true that an orange lid might not suit just anywhere. Therefore, Speidel's grit bins are also available in charcoal-grey and green. This way, your grit makes an awesome impression.

200Ltr

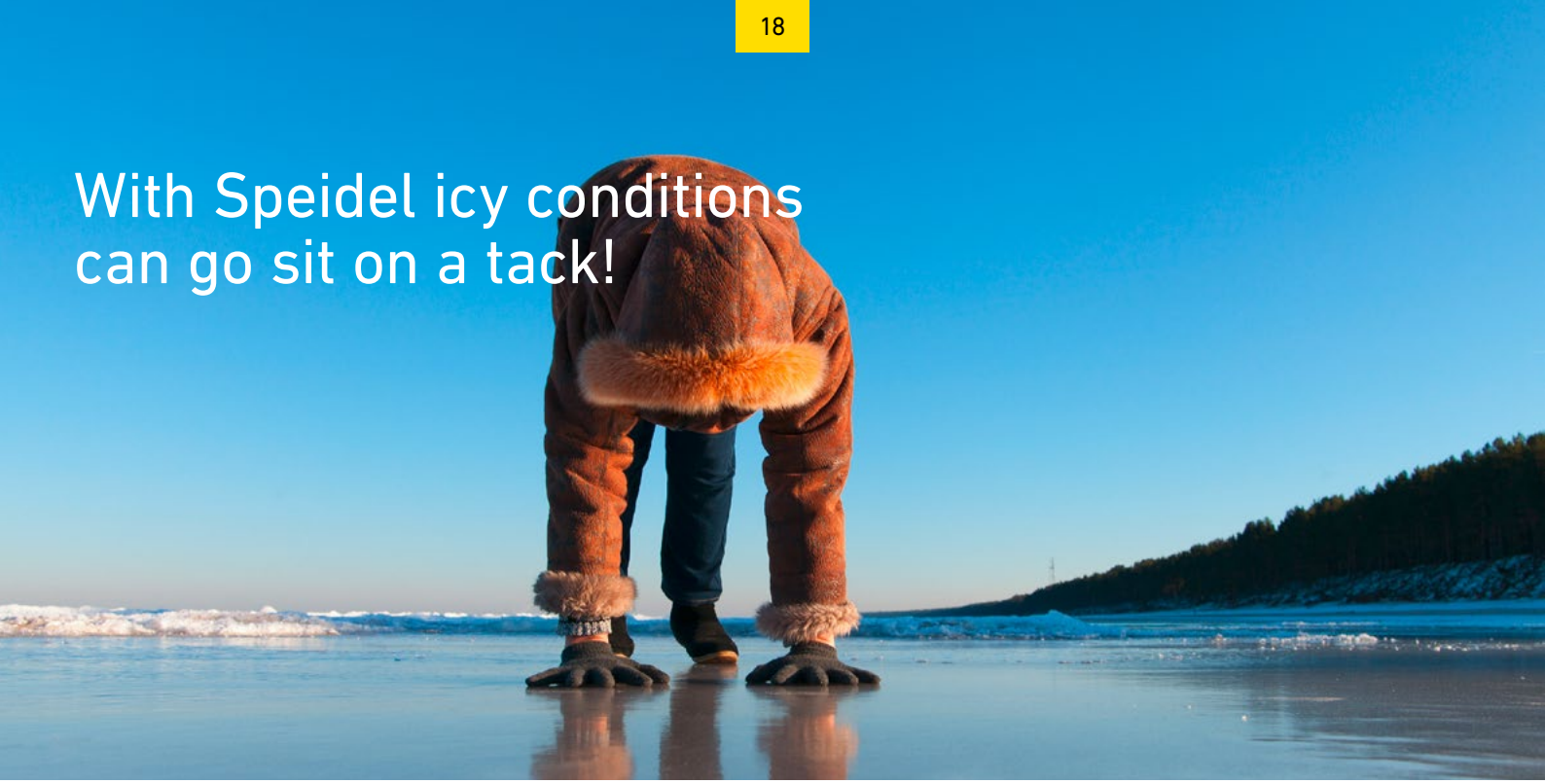

Grit bins

VERSATILITY
Apart from its efficiency for snow clearing and gritting, the bin can also be used for the storage and transportationof tools or packages.

PROPERTIES
Bins made of UV-resistant and recyclablepolyethylene. Particularly thick walls for perfect stability.

COLOURS
Standard colours: green, charcoal-grey and light grey with signal coloured orange lid, individual colours by request

DELIVERY
Directly from the producer, delivery ex works in a suitable freight style stack unit on one-way-pallet.

GRIT BIN MODELS

Product	Capacity L	Colour	Item No.	Weight kg
Grit bin	100	orange-grau anthrazit	23100 23100-02	16
	200	orange-grau anthrazit	23200 23200-02	22
	350	orange-grau anthrazit	23350 23350-02	35
	500	orange-grau anthrazit	23500 23500-02	54
Grit bin with bottom side output	350 500	orange-grau orange-grau	23351 23501	35 54
»Grit« sticker			23008	

Dimensions and weight: + / -2 %.

GRIT BIN DIMENSIONS

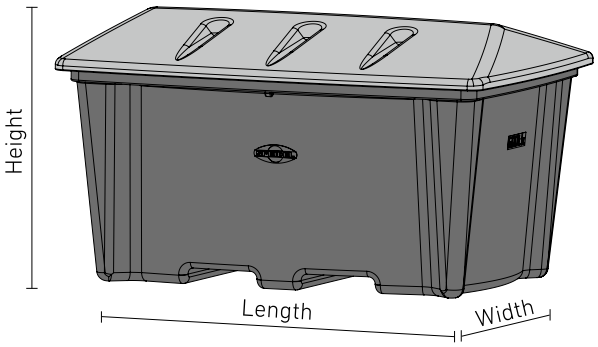

Capacity L	Length cm	Width cm	Height cm
100	80	62	56
200	101	77	64
350	128	94	68
500	141	104	80

Thanks to the bottom side output you have easy and fast access to your grit.

Dimensions and weight: + / -2 %.

01-2024/1
2024

Tanks made with passion

Speidel Tank- und Behälterbau GmbH
Krummenstraße 2
72131 Ofterdingen
Phone +49(0)7473 9462-0
Fax +49(0)7473 9462-99
verkauf@speidel-behaelter.de

Do you know all the SPEIDEL products?

www.speidels-braumeister.de

www.speidel-regenwasser.de

www.speidel-edelstahlbehaelter.de

www.wagnerwagner.de

www.speidel-kunststoffbehaelter.de

MADE IN GERMANY

Prices and technical design of the products are subject to change..